# 제품정보

# 17R22-W

**제품스펙**

| | |
|---|---|
| 전류(AMPARE) | 690A |
| 색상(COLOR) | WHITE |
| LEVITON CAMLOK 600V 690A 캠락 레비톤 PANEL MOUNT SCREW FEMALE | |

## 도면&치수

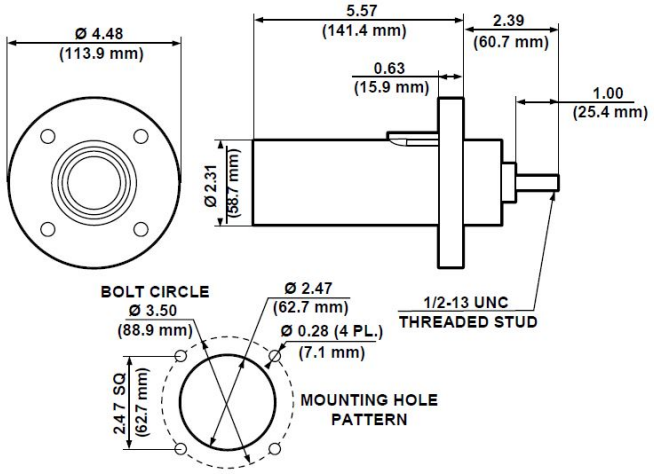


MALE PANEL RECEPTACLE THREADED STUD—90°
Cat. No. 17R21

### Electrical Specifications

**Max. Amperage:** 690 Amp

**Max. Voltage:** 600 Volt

### Material Specifications

**Contact Material:** Brass

**Sleeve Material:** Santroprene TPV

### Mechanical Specifications

**Cable Range:** 250-750MCM AWG

**Connection Type:** Threaded Stud

**Gender:** Female

### Product Features

**Cable Range:** 250-750MCM AWG

**Color:** White