제품정보

27004

제품스펙

제조사	MENNEKES
IP GRADE	IP44
전압(VOLTAGE)	400V
전류(AMPARE)	16A
극(POLES)	5P
독일 Mennekes사의 Wall mounted sockets 입니다.	

도면&치수

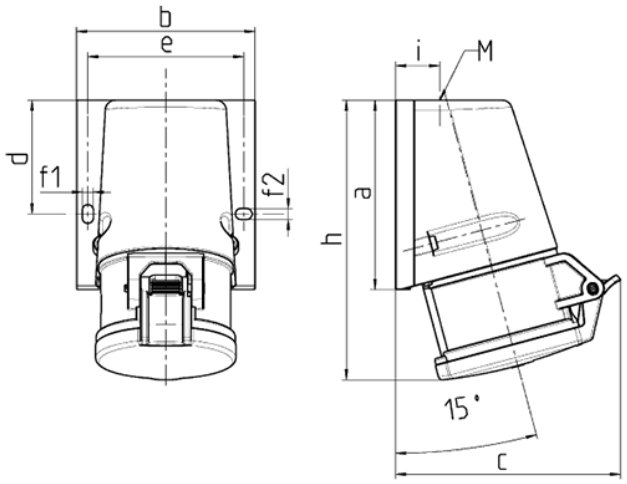

Drawing	Amp.	16			32		
1 MB 463	Poles	3	4	5	3	4	5
Dim. in mm	a	95	93	92.5	102	102	102
	b	73.5	87.5	87.5	94	94	94
	c	93	107.5	110	115.5	115.5	119.5
	d	55.5	55.5	55.5	62	62	62
	e	61	76	76	84	84	84
	f1	5.3	5.3	5.3	5.1	5.1	5.1
	f2	5.3	5.3	5.3	5.1	5.1	5.1
	h	139	139	136.5	160	160	156.5
	i	19.8	21.5	21.5	26.5	26.5	26.5
	M	M20x	M25x	M25x	M25x	M32x	M32x
		1.5	1.5	1.5	1.5	1.5	1.5
Terminal for cond. cross		1.5	1.5	1.5	2.5	2.5	2.5
section (mm²) min.-max.		—4	—4	—4	—6	—6	—6